RevNo	Revision note	Date	Signature	Checked

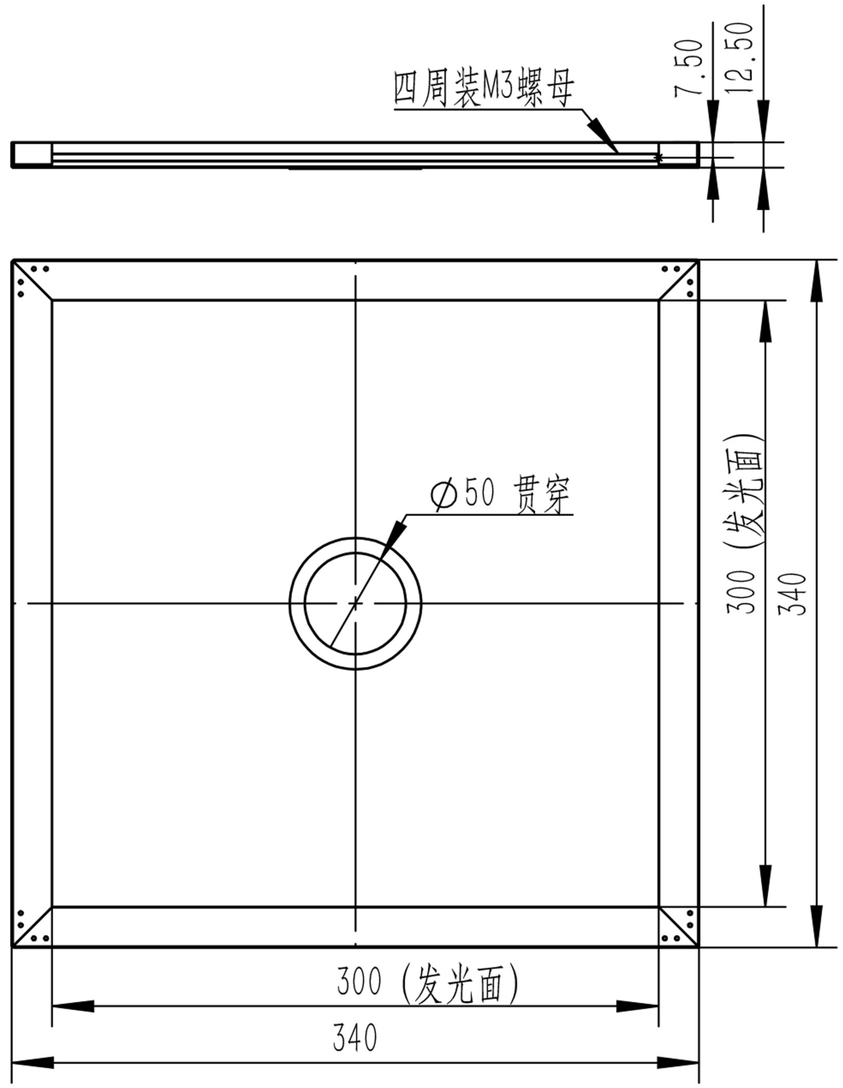

Details of Connector

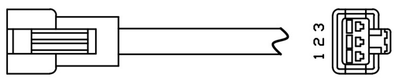

Pin1: + (Red)
Pin2: N/A
Pin3: - (Black)

Connector Type: SMR-03V-B (Light Side)
SMP-03V-BC (Power Supply Side)

Specification:

MODEL	YL-FLC300300-50-W/-UV/-B/-G/-Y/-R/-IR850/-IR940
Wavelenth (nm)	6500K (Color temperature) /390/470/525/625/850/940
Power Supply	DC24V/29 (W)

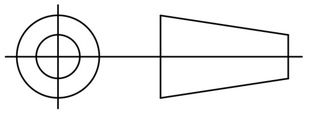

Itemref	Quantity	Material: AL/ACRIL		Article No./Reference	
			Filename FLC300300-50		Scale 1/1

双翌 SHUANGYI

FLC300300-50

YL-FLC300300-50-0000	Edition VER.1.0	Sheet 1