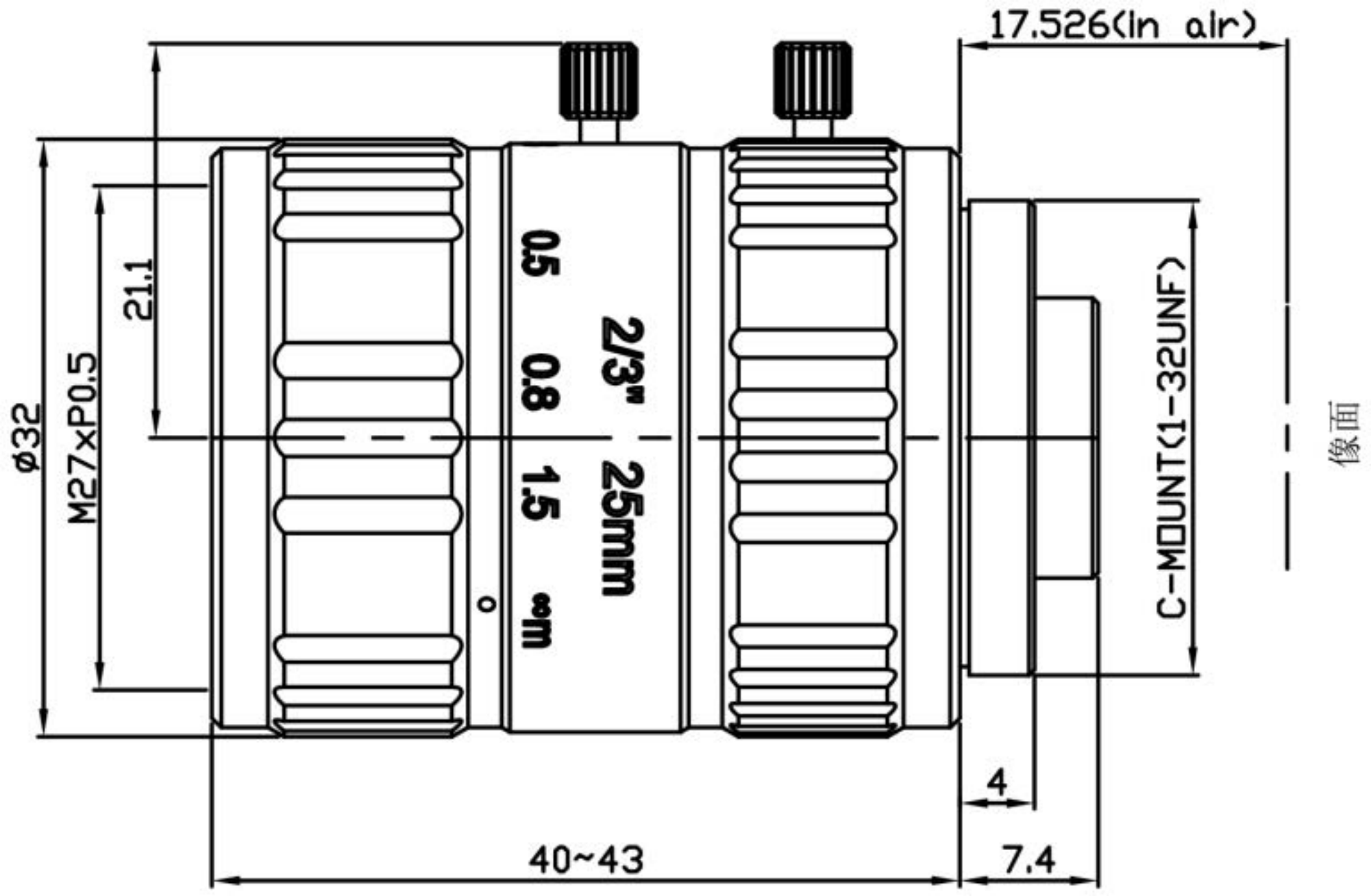
17.526(In air)
21.1
ø32
M27xP0.5
0.5
0.8
1.5
∞m
2/3"
25mm
C-MOUNT(1-32UNF)
像面
4
7.4
40~43