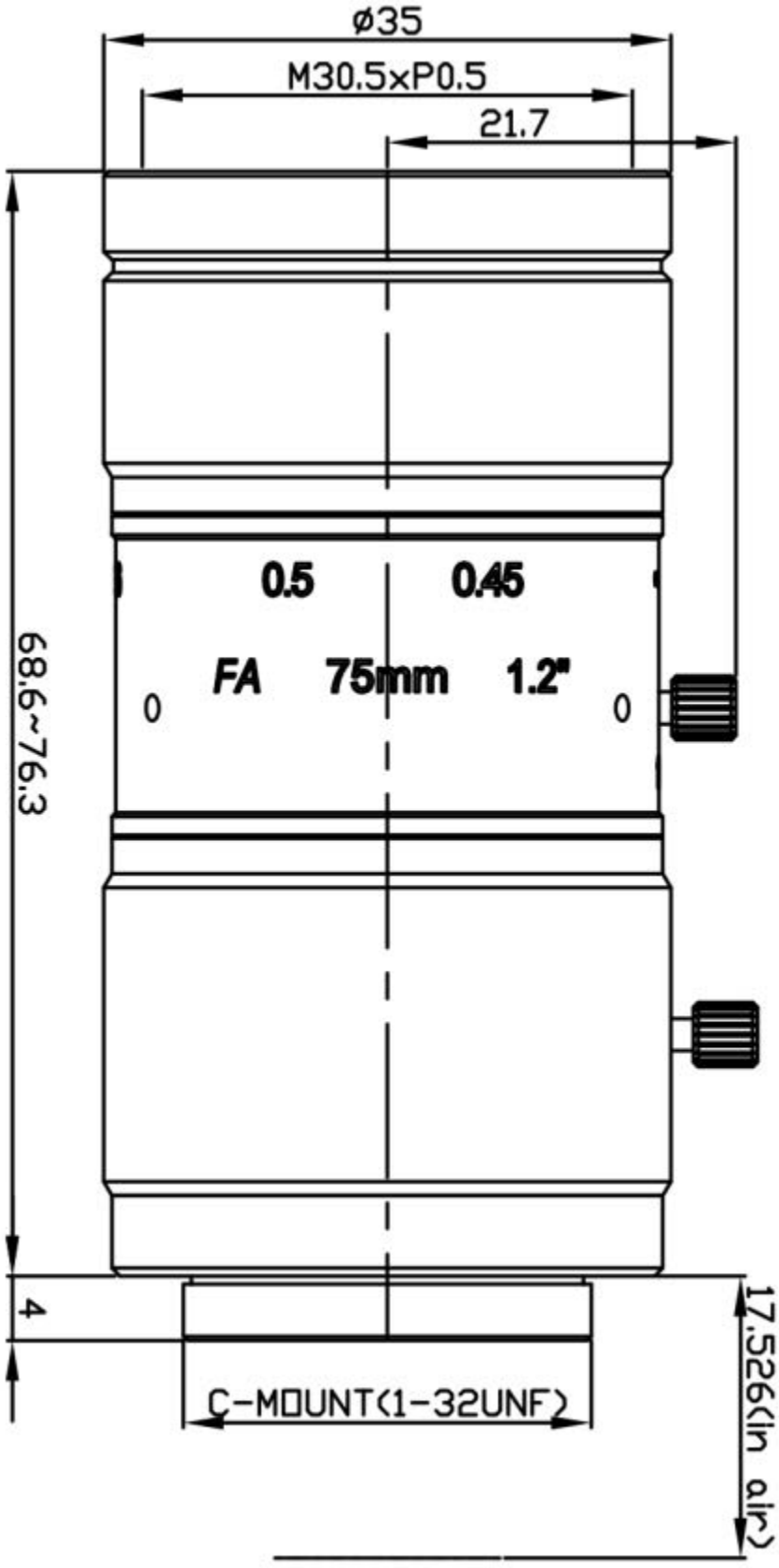
ø35
M30.5xP0.5
21.7
0.5
0.45
FA
75mm
1.2"
0
0
68.6~76.3
4
C-MOUNT(1-32UNF)
17.526(in air)

像面